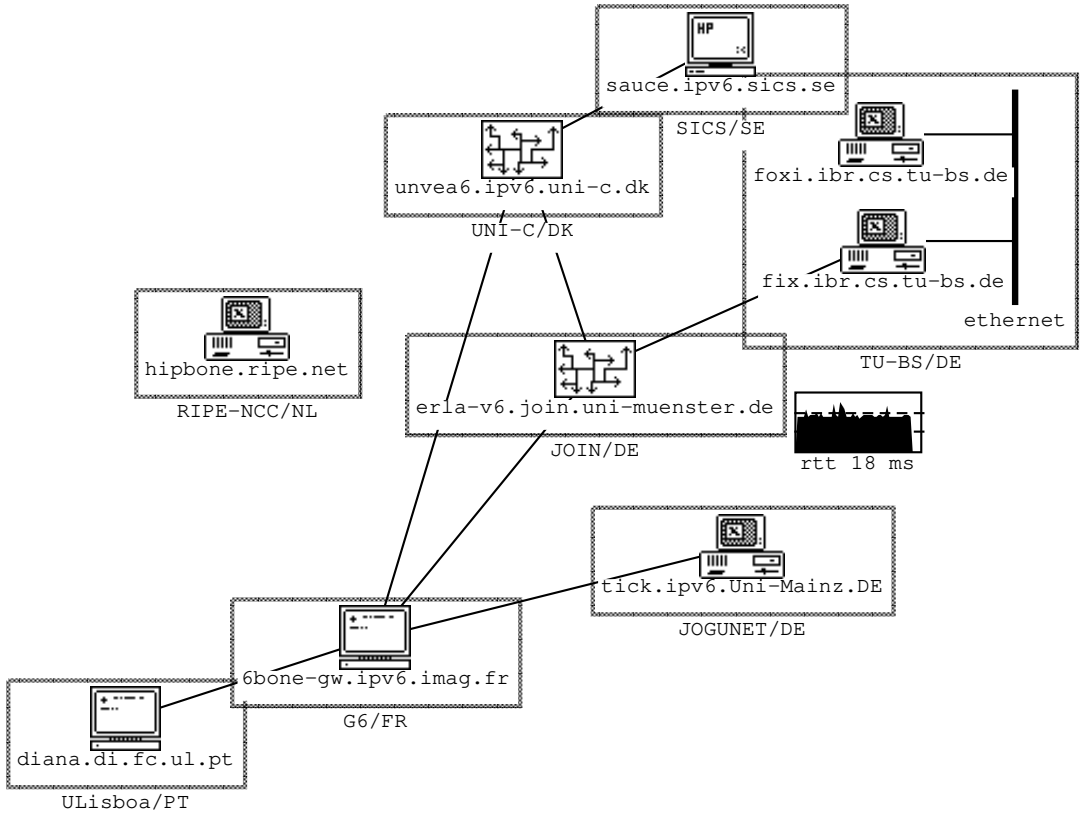
sauce.ipv6.sics.se
SICS/SE
unvea6.ipv6.uni-c.dk
UNI-C/DK
foxi.ibr.cs.tu-bs.de
fix.ibr.cs.tu-bs.de
ethernet
TU-BS/DE
hipbone.ripe.net
RIPE-NCC/NL
erla-v6.join.uni-muenster.de
JOIN/DE
rtt 18 ms
tick.ipv6.Uni-Mainz.DE
JOGUNET/DE
6bone-gw.ipv6.imag.fr
G6/FR
diana.di.fc.ul.pt
ULisboa/PT